Two-Switch BCM Flyback Single-Stage PFC for HB LED Lighting Applications

Hangseok Choi
Fairchild Semiconductor
8 Commerce drive Suite 3A
Bedford, NH 03110, USA

Abstract- **This paper presents two-switch boundary conduction mode (BCM) flyback power factor correction (PFC) for high-brightness light-emitting-diode (HB LED) applications. The proposed two-switch flyback converter employs an energy regenerative reset circuit, which allows continuous energy conversion over entire line cycle even when the reflected output voltage of the transformer is larger than the instantaneous line voltage resulting in a duty cycle greater than 50%. The two switch configuration also recycles the energy of the transformer leakage inductance to the input allowing high efficiency. The operation and performance of the proposed circuit are verified on an experimental prototype converter with 20 V and 80 W output. The measured efficiency at full load remains above 89% across entire universal line range. The input current harmonics also meet the IEC61000-3-2 (class C) standard for lighting application.**

I. INTRODUCTION

With the rapid innovations and developments in the lighting industry, coupled with the importance of energy savings and environmental friendliness, high brightness light-emitting-diodes (HB LEDs) have evolved from a simple indicator light to a prominent source of light over conventional light sources. HB LEDs offer several compelling advantages over other lighting solutions, such as less energy consumption, longer life time and enhanced light quality [1]-[3]. However, for HB LED to successfully replace standard incandescent bulbs for high volume markets, the cost of the electronics required to drive the LEDs must be minimized.

Especially, LED drivers with an input power above 25 W require power factor correction (PFC) function to meet the line current harmonic limits set by IEC61000-3-2 class C regulation [4]. The conventional two-stage approach where PFC boost converter is cascaded with a downstream LED driver converter provides almost unity power factor and low total harmonic distortion (THD). However, it requires two power stages with two controllers in each side resulting in high components count, high cost and larger size. This approach is less attractive for LED driver applications where the cost is the major issue. To minimize the cost while maintaining high power factor for LED drivers, a lot of research has been done on a single stage PFC approach, where input current shaping and voltage conversion are achieved in a single power stage [5]-[11].

The simplest way to implement single stage PFC is to use a conventional flyback converter with boundary conduction mode (BCM) [5]. However, a relative large reflected output voltage of the transformer is required to reduce the input current ripple and harmonic distortion of the line current, which necessitates high voltage rated MOSFET for universal input voltage application. Another single stage PFC is an integration of boost converter with isolated DC-DC converter using single switch [6-8]. In general, the integrated single-stage PFC converters operate in discontinuous conduction mode (DCM), and offer inherent power factor correction capability. Since this type of converters use a single switch controlled by a conventional PWM controller, an additional control circuitry for PFC can be eliminated. However, one of the main drawbacks of these approaches is that the voltage on the energy storage capacitor increases as the line voltage increases and/or output current decreases which forces to use high voltage rated switching devices. The bulk capacitor voltage feedback with a coupled winding was proposed to reduce bulk capacitor voltage within practical range [9]. However, this approach introduces significant line current distortion around line zero crossing resulting in large THD around 20~50%, which cannot meet the most stringent IEC-1000-3-2 class C limits. To meet IEC-1000-3-2 class C standard for lighting applications, several new approaches have been proposed in [10]-[11]. However, they require variable inductor to meet class C standard for universal input range, which makes the transformer design very complicated.

This paper presents two-switch BCM flyback single-stage PFC converter with an energy regenerative reset circuit. The energy regenerative reset circuit not only recycles the energy

978-1-4673-4355-8/13/$31.00 ©2013 IEEE

of the transformer leakage inductance but also adaptively varies the transformer reset voltage allowing continuous energy conversion over entire line cycle even when the instantaneous line voltage is smaller than the reflected output voltage resulting in a duty cycle larger than 50%. The two switch configuration also allows low voltage stress on the secondary side rectifier diode with a large transformer turns ratio, which allows higher efficiency compared to the conventional single switch flyback converter by employing low voltage drop diode. The operation and performance of the proposed circuit is verified on an experimental prototype converter with 20 V /80 W output and universal input.

II. Two Switch BCM Flyback Converter with Energy Regenerative Clamping Circuit

Fig. 1 shows the schematic of the proposed two-switch BCM flyback single-stage PFC converter and the key waveforms during half of AC mains cycle is illustrated in Fig. 2. As can be seen in Fig. 2, constant ON time is provided from the controller, where the ON time should be maintained constant for at least a half mains cycle to achieve PFC functionality. The circuit is identical to the conventional two switch flyback converter except for energy regenerative reset circuit that is composed of D_R and C_R. The conventional two switch flyback converter cannot deliver power to the secondary side when the input voltage is smaller than the reflected output voltage (nVo) since the output rectifier diode is not turned on under this condition, where all the energy stored in the magnetizing inductance of the transformer is restored to the input. The energy regenerative reset circuit provides virtual input voltage which is always higher than the reflected output voltage allowing continuous line current shaping over entire line cycle even when the input voltage is smaller than the reflected output voltage.

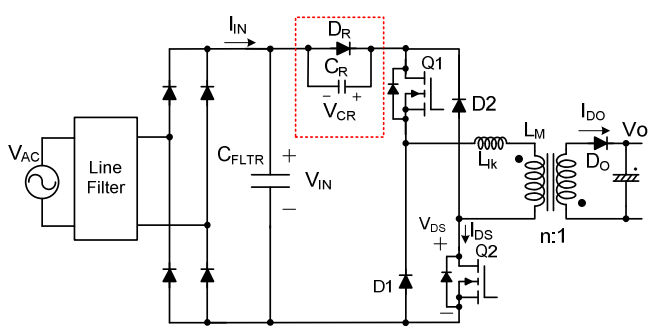

Fig.1. Schematic of proposed single stage PFC converter

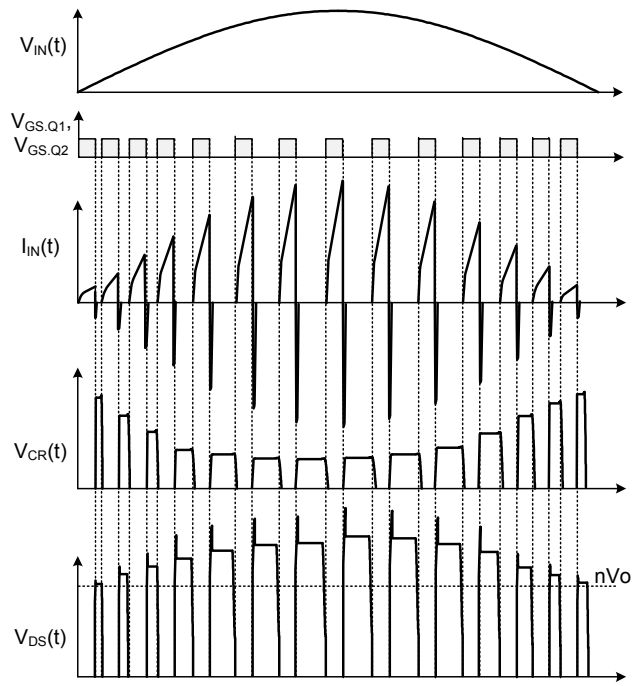

Fig.2. Operation waveforms of proposed converter for half of AC mains cycle

The detailed operation of the proposed circuit within a switching cycle is illustrated in Fig. 3. The proposed converter has six operation modes during a switching cycle and their equivalent circuits are illustrated in Fig. 4. To simplify the analysis, the followings are assumed:

- The leakage inductance of the transformer is much smaller than the magnetizing inductance.
- The MOSFET output capacitance is much smaller than the reset capacitor.
- The reset capacitor (C_R) is much smaller than the high frequency bypass capacitor (C_{FLTR}) and therefore, the voltage across C_{FLTR} is constant during one switching cycle
- The MOSFET is turned on at the valley of drain voltage maintaining BCM operation.

Mode1 (0-t_1): Initially, the reset capacitor is charged to $V_{CR}(0)$ at t=0. Q1 and Q2 are turned on together at t=t_0. Then, the sum of input voltage and reset capacitor voltage is applied across the transformer primary winding. The primary side input current ramps up as

$$I_{IN}(t) = \frac{V_{IN} + V_{CR}(0)}{Z_1} \cdot \sin(\omega_1 t) \tag{1}$$

where $\omega_1 = \dfrac{1}{\sqrt{(L_{lk} + L_M)C_R}}$ *and* $Z_1 = \sqrt{\dfrac{L_{lk} + L_M}{C_R}}$.

Whereas, the clamping capacitor is discharged as

$$V_{CR}(t) = [V_{CR}(0) + V_{IN}]\cos(\omega_1 t) - V_{IN} \ . \tag{2}$$

When the clamping capacitor is fully discharged at t=t_1, the diode D_R is turned on and this mode ends. The time duration of this mode is given as

$$t_1 = \frac{1}{\omega_1}\cos^{-1}\left(\frac{V_{IN}}{V_{CR}(0)+V_{IN}}\right). \quad (3)$$

Mode2 (t_1-t_2) : Since the reset capacitor has been fully discharged in mode 1, the input voltage is solely applied across the transformer primary winding in this mode and the primary side input current continues to increase linearly as

$$I_{IN}(t) = \frac{V_{IN}}{L_M + L_{lk}}(t-t_1) + I_{IN}(t_1). \quad (4)$$

At $t=t_2$, Q1 and Q2 are turned off and mode 2 ends.

The peak value of input current at the end of this mode is given as

$$I_{IN}^{PK} = \frac{V_{IN}}{L_M + L_{lk}}(t_2-t_1) + I_{IN}(t_1). \quad (5)$$

Mode3 (t_2-t_3) : After Q1 and Q2 are turned off at $t=t_2$, the current of the magnetizing inductance charges the reset capacitor through the clamping diode D1 and D2 until the sum of the reset capacitor voltage and input voltage is same as the reflected output voltage as

$$V_{CR}(t) = \frac{I_{IN}^{PK}}{C}(t-t_2). \quad (6)$$

When the sum of the reset capacitor voltage and input voltage is same as the reflected output voltage at $t=t_3$, the output rectifier diode begins conducting and this mode ends. This mode does not exist when the input voltage is larger than the reflected output voltage.

Mode4 (t_3-t_4) : The reflected output voltage is applied across magnetizing inductance. Then, the current of the leakage inductance continues to charge the reset capacitor as

$$\begin{aligned} V_{CR}(t) &= (V_{IN} + V_{CR}(t_3) - nV_O)\cos(\omega_2(t-t_3)) \\ &\quad - V_{IN} + nV_O + Z_2 I_{IN}^{PK}\sin(\omega_2(t-t_3)) \end{aligned} \quad (7)$$

where $\begin{aligned} V_{CR}(t_3) &= 0 \ \ when\ V_{IN} > nV_O \\ V_{CR}(t_3) &= nV_O - V_{IN} \ \ when\ V_{IN} < nV_O \end{aligned}$.

As the reset capacitor votlage increases, the reset current decreases as

$$\begin{aligned} I_R(t) = -I_{IN}(t) &= I_{IN}^{PK}\cos(\omega_2(t-t_3)) \\ &\quad - \frac{V_{IN} + V_{CR}(t_3) - nV_O}{Z_2}\sin(\omega_2(t-t_3)) \end{aligned} \quad (8)$$

where $\omega_2 = \frac{1}{\sqrt{L_{lk}C_R}}$ *and* $Z_2 = \sqrt{\frac{L_{lk}}{C_R}}$.

At $t=t_4$, the reset current through the D1 and D2 reaches zero and D1 and D2 are turned off. The maximum voltage of the clamping capacitor can be obtained as

$$\begin{aligned} V_{CL} &= (V_{IN} + V_{CR}(t_3) - nV_O)\cos(\theta_C) \\ &\quad - V_{IN} + nV_O + I_{IN}^{PK} Z_2 \sin(\theta_C) \end{aligned} \quad (9)$$

where $\theta_C = \tan^{-1}\left(\frac{I_{IN}^{PK} Z_2}{V_{IN} + V_{CR}(t_3) - nV_O}\right)$.

, which is the initial voltage of reset capacitor at $t=t_0$.

Equation (9) for $V_{IN} > nV_O$ can be simplified as

$$V_{CL} = \sqrt{(V_{IN} - nV_O)^2 + (Z_2 I_{IN}^{PK})^2} - (V_{IN} - nV_O) \quad (10)$$

Whereas, (9) for $V_{IN} < nV_O$ can be simplified as

$$V_{CL} = nV_O - V_{IN} + I_{IN}^{PK} Z_2 \quad for\ V_{IN} < nV_O \quad (11)$$

Mode5 (t_4-t_5) : Since the reset capacitor has been charged up in mode 4 such that the sum of input voltage and reset capacitor voltage is higher than the reflected output voltage, the seconday rectifier diode starts conducting at $t=t_4$. During this mode, the output voltage is applied across the transformer secondary winding and the secondary side diode current ramps down. The sum of input voltage, reset capacitor voltage and reflected output voltage is applied across series connected Q1 and Q2. Then the voltage across each MOSFET Q1 and Q2 in this mode is given as

$$V_{DS.M5} = \frac{V_{IN} + V_{CL} + nV_O}{2}. \quad (12)$$

At the end of mode, the secondary side diode current reaches zero.

Mode6 (t_5-t_6) : Once the secondary side diode current reaches zero, the voltage across each MOSFET Q1 and Q2 oscilates by the resonance between the magnetizing inductance and MOSFET output capacitance. When the drain votlage reaches its valley as

$$V_{DS.VLY} = \frac{V_{IN} + V_{CL} - nV_O}{2} \quad (13)$$

, Q1 and Q2 are turned on achieving valley switching.

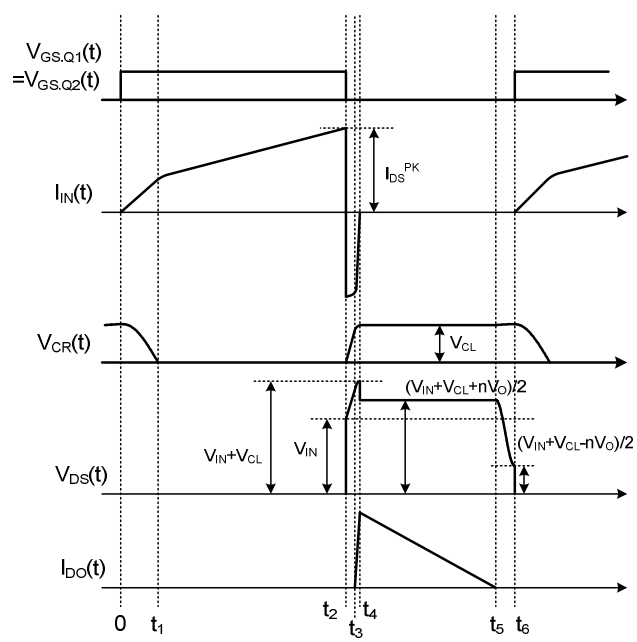

Fig.3. Operation waveforms of proposed converter for a switching cycle

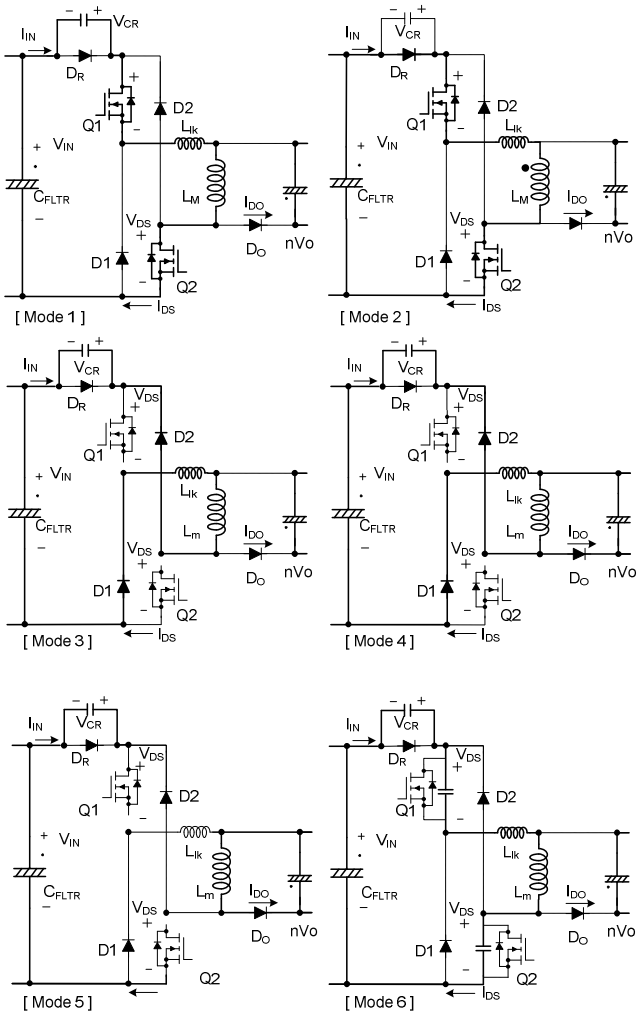

Fig.4. Operation mode of proposed converter

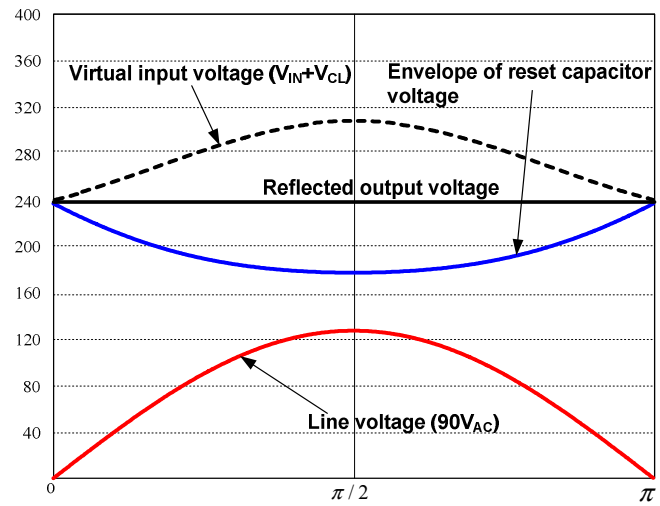

Fig.5. Variation of reset capacitor envelope (90V_{AC})

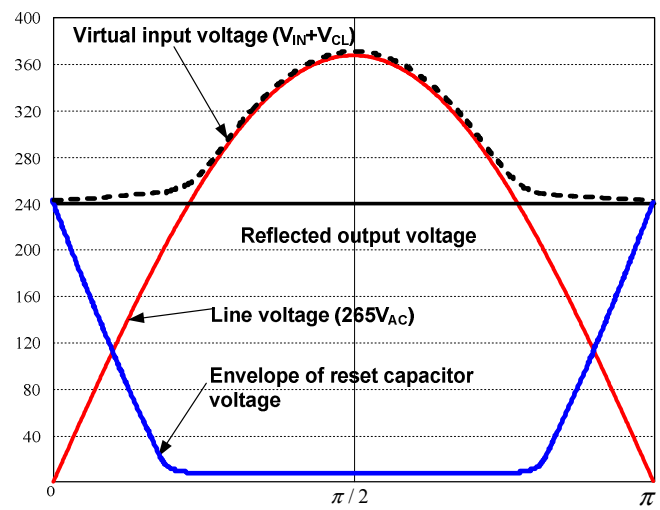

Fig.6. Variation of reset capacitor envelope (265V_{AC})

Assuming that the MOSFET current envelope is proportional to the line voltage with a constant ON time control, the envelope (maximum in corresponding switching cycle) of reset capacitor voltage together with the virtual input voltage (sum of input voltage and reset capacitor votlage envelope) are plotted in Fig. 5 and Fig. 6 for low line and high line, respectively using (10) and (11). The reflected output voltage and output power are set as 240 V and 80 W, respectively. The leakage inductance and reset capacitor are 5 μH and 5 nF, respectively. For low line where the line voltage is always smaller than the reflected output voltage, the reset capacitor is charged to make the virtual input voltage always higher than the reflected output voltage. For high line, especially while the instantaneous line voltage is higher than the reflected outptu voltage, the reset capacitor voltage is charged to relatively low level since the virtual input voltage is already higher than the instantaneous line voltage.

III. EXPERIMENTAL RESULTS

To verify the operational principle and analysis of the proposed method and to demonstrate its performance, an experimental single stage PFC converter with 20 V / 80 W output and universal input has been built and tested. The schematic along with key components is shown in Fig. 7. Fig. 8 and Fig. 9 shows the line current and MOSFET drain voltage at full load condition for 115 V_{AC} and 230 V_{AC} line voltages, respectively. The MOSFET drain voltage is maintained well below 400 V allowing 500 V MOSFETs to be used with enough margin. Since the transformer turns ratio is 12:1, 60V diode can be used in the secondary side. Fig. 10 shows the measured harmonics current along with IEC61000-3-2 class C limit. As can be seen, the proposed circuit can

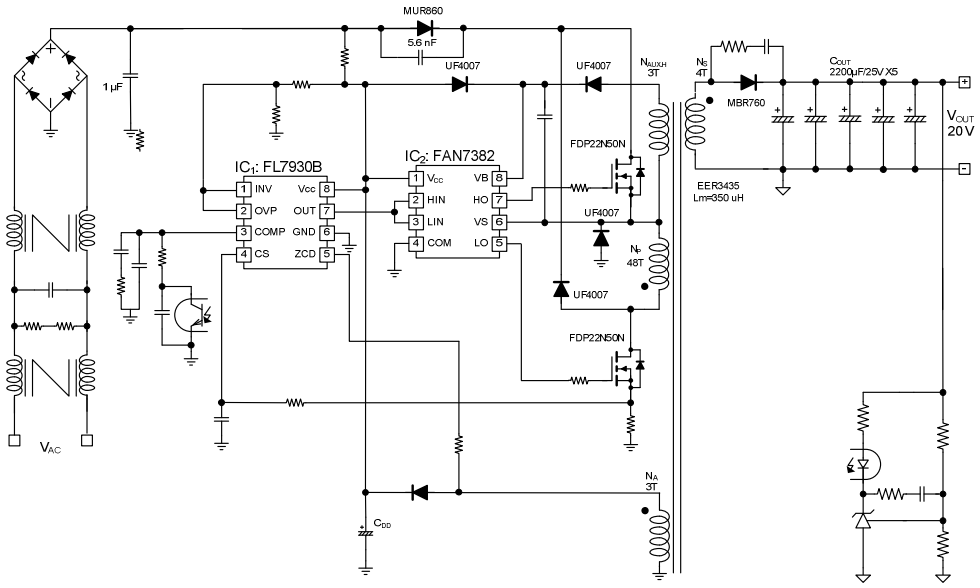

Fig. 7. Schematic of experimental prototype of proposed method

meet class C limit. The measured total harmonic distortion (THD) is 19.2% and 14.4% at full load for 115 V_{AC} and 230 V_{AC} line voltages, respectively. The measured power factor is 95.3% and 90.1% at full load for 115 V_{AC} and 230 V_{AC} line voltages, respectively. Even though the THD for high line is lower than that of low line, lower power factor is obtained at high line due to the phase leading of line current caused by large input filter capacitor. Fig. 11 shows the measured efficiency at 100%, 50% and 25% of full load for different line condition. As can be seen, high efficiency above 89% is achieved for entire line voltage range at full load condition.

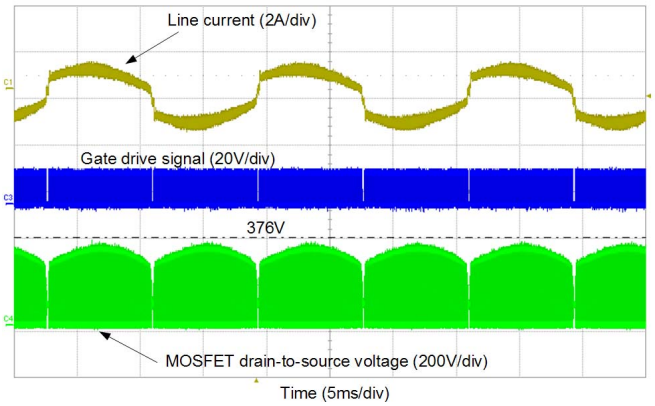

Fig.8. Operation mode of proposed converter (115 V_{AC})

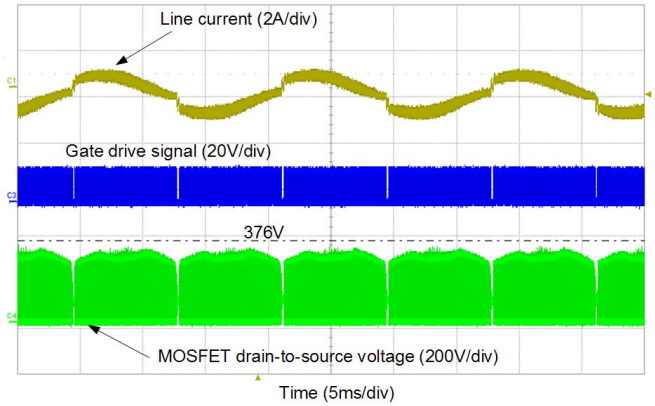

Fig.9. Operation mode of proposed converter (230 V_{AC})

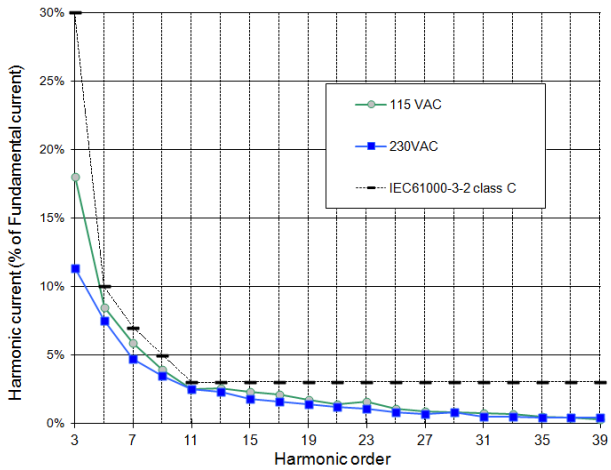

Fig.10. Measured harmonic current and IEC61000-3-2 class C limits

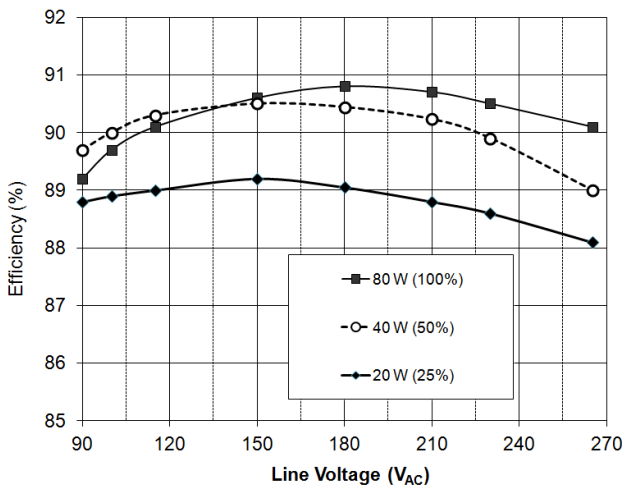

Fig.11. Measured efficiency

IV. CONCLUSION

This paper has proposed two-switch BCM flyback single-stage PFC converter for high-brightness light-emitting-diode (HB LED) applications. The proposed two-switch flyback converter employs an energy regenerative reset circuit, which provides an adaptively changing virtual input voltage allowing continuous line current shaping over entire line cycle. The energy stored in the transformer leakage inductance is recycled to the input side allowing high efficiency. An experimental prototype with 20 V and 80 W output has been built and tested to verify the operation and performance of the proposed circuit. The measured efficiencies remain above 89% at full load across entire universal line range. The input current harmonics at full load condition also meet the IEC61000-3-2 (class C) standard.

REFERENCES

[1] J. Y. Tsao, "Solid-state lighting: lamps, chips, and materials for tomorrow," IEEE Circuits and Devices Magazine, vol. 20, no. 3, pp. 28 - 37, May-June 2004.

[2] N. Narendran and Y. Gu, "Life of LED-based white light sources," Journal of Display Technology, vol. 1, no. 1, pp. 167 - 171, Sept. 2005.

[3] T. Komine and M. Nakagawa, "Fundamental analysis for visible-light communication system using LED lights," IEEE Transactions on Consumer Electronics, vol. 50, no. 1, pp. 100 - 107, Feb. 2004.

[4] Electromagnetic Compatibility (EMC), Part 3-2: Limits – Limits for harmonic current emissions (equipment input current ≤ 16 A per phase), International Standard IEC 61000-3-2, 2001.

[5] Fairchild Semiconductor Application Note An-8025, "Design Guideline of Single-Stage Flyback AC-DC converter using Fan7530 for LED lighting", http://www.fairchildsemi.com/an/AN/AN-8025.pdf

[6] R. Redl, L. Balogh, and N. O. Sokal, "A new family of single-stage isolated power-factor correctors with fast regulation of the output voltage," in Proc. IEEE Power Electronics Specialists Conf., 1994, pp.1137-1144.

[7] L. Huber and M. M. Jovanovic, "Single-stage single-switch input-current-shaping technique with reduced switching loss," IEEE Trans. Power Electron., vol. 15, no. 4, pp. 681-687, July 2000.

[8] C. Qiao and K. M. Smedley, "A topology survey of single stage power factor corrector with a boost type input-current shaper," IEEE Trans. Power Electron., vol. 16, no. 3, pp. 360–368, May 2001.

[9] Q. Zhao, F. C. Lee, and F. Tsai, "Voltage and current stress reduction in single-stage power factor correction ac/dc converters with bulk capacitor voltage feedback," IEEE Trans. Power Electron., vol. 17, no. 4, pp. 477 - 483, July 2002.

[10] Y. Hu, L. Huber and M. M. Jovanovic, "Universal-input single-stage PFC flyback with variable boost inductance for high-brightness LED applications," IEEE Applied Power Electronics Conference and Exposition (APEC) 2010, pp. 203-209.

[11] Y. Hu, L. Huber and M. M. Jovanovic, "Single-Stage, Universal-Input AC/DC LED Driver With Current-Controlled Variable PFC Boost Inductor," IEEE Transactions on Power Electronics, vol. 27, no. 3, pp. 1579 -1588, March, 2012.